MORE POWER - LESS SPACE®

Deka®

unigy I®

UL CERTIFIED
SAFETY US-CA
MH66221

12AVR75

- **Exclusive IPF® technology optimizes power capacity, cell consistency, and long-term reliability**
- Advanced AGM technology for superior power
- Puncture resistant micro-porous glass mat separators extend life
- Reinforced case resists bulging and meets safety requirements (UL 94 V-0)
- Case & cover heat sealed and 100% tested to prevent leaks
- Epoxy sealed posts eliminate leaks
- Flame arresting, low-pressure, self-sealing valves are 100% factory tested
- Computer-aided design and manufacturing control processes and standards to ensure quality products
- All batteries meet or exceed IEEE recommended practices
- Battery design and construction meet UL recognition requirements
- Plate thickness optimized for long life
- Guaranteed 100% initial string capacity when tested in accordance with IEEE 1188
- Designed to meet GR-4228-CORE
- 48 volt system fits in 23” relay rack tray
- UL 1973 Certification for Energy Storage applications

SPECIFICATIONS

Nominal Voltage: 12-Volts
Rating: 70.6 Ampere-Hours @ 8 hr. rate to 1.75 V.P.C.
Positive Plate: >98% Pure lead with tin-calcium alloy
Negative Plate: Pure lead, calcium alloy
Post Seal: Epoxy-sealed
Terminal: Top access, 1/4" – 20 threaded insert
Case/Cover: Flame-retardant, polypropylene – UL 94 V-0/>28% L.O.I.

Safety Vent: Low positive pressure, self-sealing w/ flame arrestor
Float Voltage: 13.50V per battery ± 0.5% @ 77°F (25°C)
Range: 13.42V to 13.57V per battery
Design life: 10 years in float applications @ 77°F (25°C)
Dimensions: Length - 10.20" (259.1 mm)
Width - 6.56" (166.7 mm)
Height - 8.24" (209.3 mm)
Weight: 54 lbs. (24 kg)

DISCHARGE RATINGS IN AMPS @ 77°F (25°C)†

Volts per Cell (V.P.C.)	1 HR.	2 HR.	3 HR.	4 HR.	5 HR.	8 HR.	12 HR.	20 HR.	24 HR.
1.75	51.4	29.3	20.8	16.2	13.4	8.8	6.1	3.8	3.2
1.80	50.8	29.0	20.6	16.1	13.3	8.8	6.1	3.8	3.2
1.85	49.6	28.5	20.3	15.8	13.1	8.6	6.0	3.7	3.2
1.88	46.6	26.8	19.2	15.1	12.4	8.3	5.8	3.6	3.1
1.90	45.2	25.9	18.4	14.4	11.9	7.9	5.5	3.4	2.9

†*Subject to change without notice.*

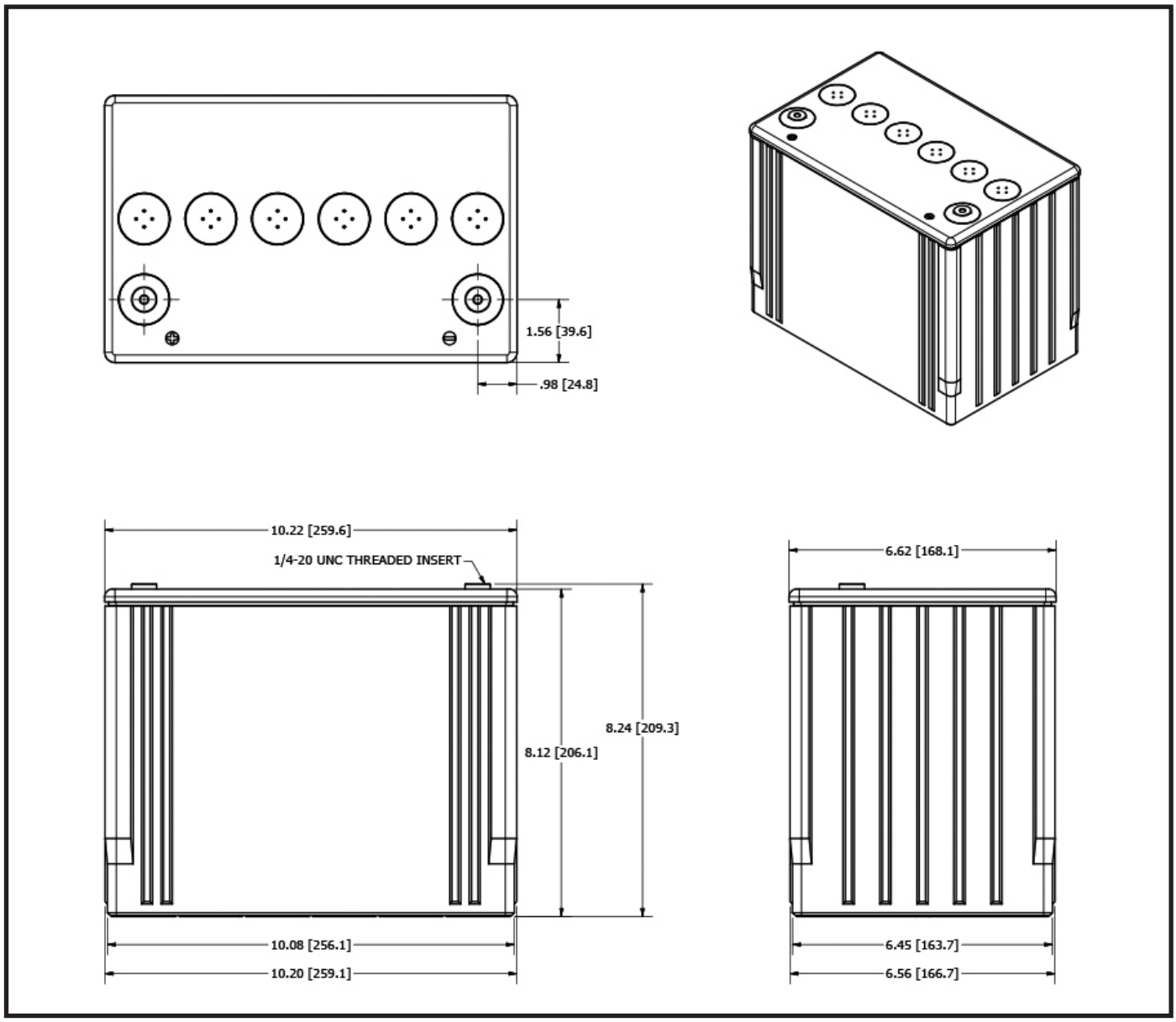

INSTALLATION AND OPERATING INSTRUCTIONS

- http://www.eastpennmanufacturing.com/wp-content/uploads/Unigy-I-IO-Manual-0902.pdf

PROPOSITION 65 WARNING: Battery posts, terminals and related accessories contain lead and lead compounds, chemicals known to the State of California to cause cancer and reproductive harm. Batteries also contain other chemicals known to the State of California to cause cancer. **WASH HANDS AFTER HANDLING.**

EASTPENN

www.dekabatteries.com

QUALITY SYSTEM CERTIFIED ISO 9001 IATF 16949 ENVIRONMENTAL SYSTEM CERTIFIED ISO 14001

UL Recognized Component

East Penn Manufacturing Co. Lyon Station, PA 19536-0147 Phone: 610-682-3263 Fax: 610-682-0891 e-mail: reservepowersales@dekabatteries.com

E.P.M. Form No. 2382 4/25

© 2025 by EPM Printed in U.S.A.

All data subject to change without notice. No part of this document may be copied or reproduced, electronically or mechanically, without written permission from the company.